BOOK 1832 PAGE 238

NELSON'S CREEK

LOTS 190-330 INCLUSIVE, AND OUTLOT 4 BEING A PLATTING OF PART OF THE SOUTHEAST 1/4 OF SECTION 11, TOWNSHIP 15 NORTH, RANGE 11 EAST OF THE 6th P.M., DOUGLAS COUNTY, NEBRASKA

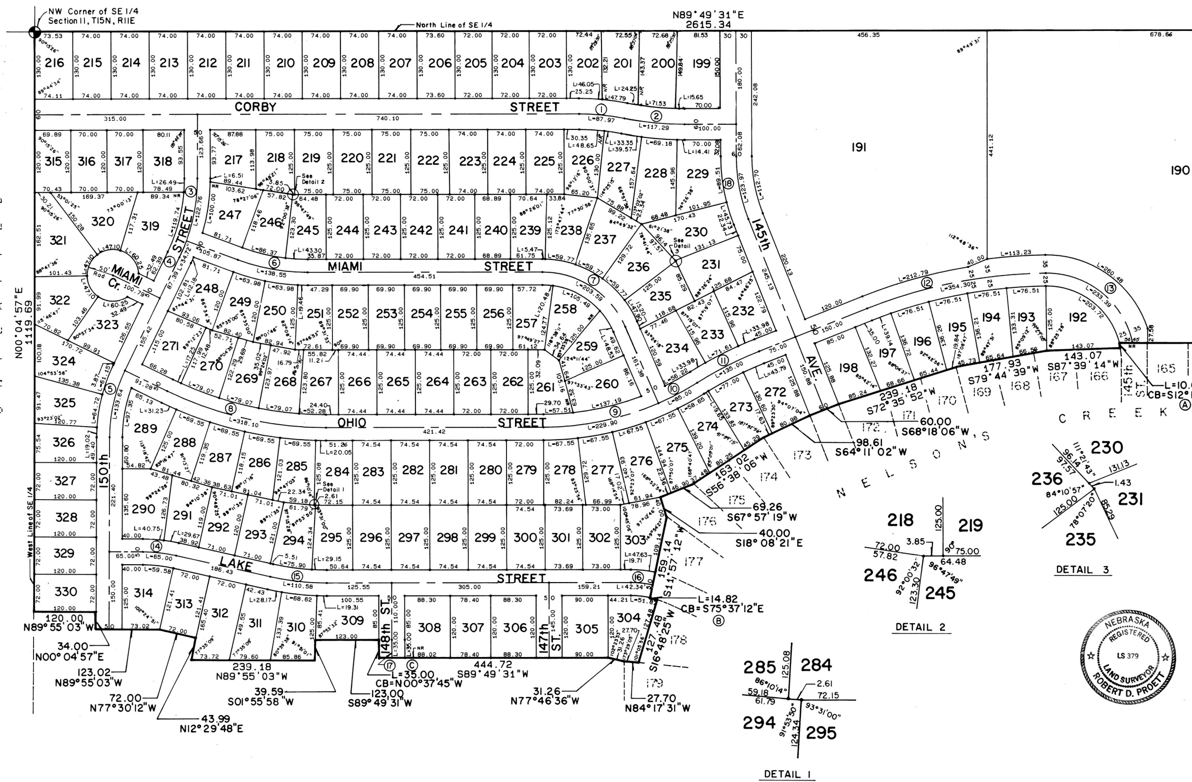

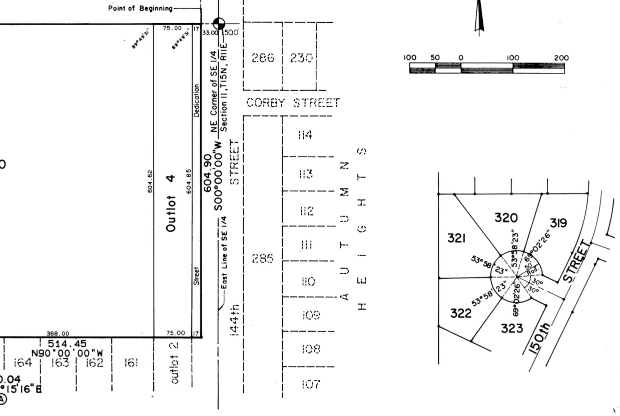

SURVEYOR'S CERTIFICATE

I HEREBY CERTIFY that I have made a boundary survey of the subdivision herein and that temporary monuments have been set at all angle points and ends of curves on the boundary of the plat and that a bond has been posted with the City of Omaha, Nebraska, in order to ensure that permanent monuments will be placed at all corners of all lots, streets, angle points, and ends of curves; said subdivision to be known as NELSON'S CREEK (Lots 190 through 330 inclusive and Outlot 4) being a platting of that part of the Southeast Quarter of Section 11, Township 15 North, Range 11 East of the 6th P.M., Douglas County, Nebraska, described by metes and bounds as follows: Commencing at the northeast corner of said Southeast 1/4 of Section 11; thence South 89°49'31" West (bearings referenced to the NELSON'S CREEK Final Plat of Lots 1 through 189, inclusive, and Outlots 1 through 3, inclusive a subdivision as surveyed, platted, and recorded in Douglas County, Nebraska), along the north line of the said Southeast 1/4 of Section 11 for 33.00 feet to the intersection with the west right-of-way line of 144th Street and the TRUE POINT OF BEGINNING; thence South 00°00'00" West for 604.90 feet along the said west R.O.W. line of 144th Street which is parallel with and 33.00 feet west of the east line of the said Southeast 1/4 of Section 11; thence North 90°00'00" West for 514.45 feet along the north line of Lots 161 through 165, inclusive, NELSON'S CREEK to the west R.O.W. line of 145th Street; thence along a curve to the right (having a radius of 145.00 feet and a long chord bearing South 12°15'16" East for 10.04 feet) for an arc distance of 10.04 feet to the northeast corner of Lot 166, NELSON'S CREEK; thence South 87°39'14" West for 143.07 feet along the north line of Lots 166 and 167, NELSON'S CREEK; thence South 79°44'39" West for 177.93 feet along the north line of Lots 167, 168 and 169, NELSON'S CREEK to the northwest corner of said Lot 169, NELSON'S CREEK; thence South 72°35'52" West for 239.18 feet to the northwest corner of Lot 172, NELSON'S CREEK; thence South 68°18'06" West for 60.00 feet to the northeast corner of Lot 173, NELSON'S CREEK; thence South 64°11'02" West for 98.61 feet to the northeast corner of Lot 174; NELSON'S CREEK; thence South 56°38'06" West for 163.02 feet to the northeast corner of Lot 176, NELSON'S CREEK; thence South 67°57'19" West for 69.26 feet to the northwest corner of Lot 176, NELSON'S CREEK; thence South 18°08'21" East for 40.00 feet to the northwest corner of Lot 177, NELSON'S CREEK; thence South 11°57'12" West for 159.14 feet along the west line of Lot 177, NELSON'S CREEK to the south R.O.W. line of Lake Street; thence along a curve to the right (having a radius of 175.00 feet and a long chord bearing South 75°37'12" East for 14.82 feet) for an arc distance of 14.82 feet to the northwest corner of Lot 178, NELSON'S CREEK; thence radially South 16°48'25" West for 127.48 feet to the southwest corner of Lot 178, NELSON'S CREEK; thence North 84°17'31" West for 27.70 feet to the northwest corner of Lot 179, NELSON'S CREEK; thence North 77°46'36" West for 31.26 feet; thence South 89°49'31" West for 444.72 feet; thence along a curve to the right (having a radius of 2207.16 feet and a long chord bearing North 00°37'45" West for 35.00 feet) for an arc distance of 35.00 feet; thence radially South 89°49'31" West for 123.00 feet; thence South 01°55'58" West for 39.59 feet; thence North 89°55'03" West for 239.18 feet; thence North 12°29'48" East for 43.99 feet; thence North 77°30'12" West for 72.00 feet; thence North 89°55'03" West for 123.02 feet; thence North 00°04'57" East for 34.00 feet; thence North 89°55'03" West for 120.00 feet to the west line of the said Southeast 1/4 of Section 11; thence North 00°04'57" East for 1119.69 feet to the northwest corner of the said Southeast 1/4 of Section 11; thence North 89°49'31" East for 2615.34 feet to the Point of Beginning. Contains 54.73 acres.

NEBRASKA REGISTERED LS 379 LAND SURVEYOR ROBERT D. PROETT

3-16-88
Date

Robert D. Proett, L.S. #379

BOUNDARY CURVE DATA

Curve #		Radius	Tangent	Length	Degree
A	03°58'00"	145.00	5.02'	10.04'	39.5143°
B	04°51'13"	175.00'	7.42'	14.82'	32.7405°
C	00°54'31"	2207.16'	17.50'	35.00'	2.5959°

CENTERLINE CURVE DATA

Curve #		Radius	Tangent	Length	Degree
1	11°12'03"	450.00'	44.13'	87.97'	12.7324°
2	11°12'03"	600.00'	58.84'	117.29'	9.5493°
3	20°05'48"	350.00'	62.02'	122.76'	16.3702°
4	05°40'58"	350.00'	17.37'	34.72'	16.3702°
5	25°46'47"	297.01'	67.97'	133.64'	19.2909°
6	20°21'15"	390.00'	70.01'	138.55'	14.6912°
7	66°39'18"	175.00'	115.07'	203.59'	32.7405°
8	26°02'13"	700.00'	161.85'	318.10'	8.1851°
9	23°20'42"	564.25'	116.57'	229.90'	10.1543°
10	08°37'52"	564.25'	42.58'	85.00'	10.1543°
11	10°27'09"	740.00'	67.69'	135.00'	7.7427°
12	20°55'41"	970.00'	179.15'	354.30'	5.9068°
13	78°39'40"	170.00'	139.30'	233.39'	33.7034°
14	12°24'51"	300.00'	32.63'	65.00'	19.0986°
15	12°40'17"	500.00'	55.52'	110.58'	11.4592°
16	12°07'41"	200.00'	21.25'	42.34'	28.6479°
17	00°55'08"	2182.16'	17.50'	35.00'	2.6256°
18	21°31'25"	330.00'	62.72'	123.97'	17.3624°

NOTES:

1. ALL DISTANCES SHOWN ON CURVES ARE ARC DISTANCES NOT CHORD DISTANCES.
2. ALL ANGLES ARE 90° UNLESS OTHERWISE NOTED.
3. ALL LOT LINES ON CURVED STREETS ARE RADIAL UNLESS OTHERWISE NOTED. (N.R.).

COUNTY SURVEYOR'S CERTIFICATE

This plat of NELSON'S CREEK was reviewed by the Douglas County Surveyor's office.

3/29/88
Date

DOUGLAS COUNTY ENGINEER OFFICIAL SEAL NEBRASKA

Phillip A. Burke
Douglas County Surveyor

COUNTY TREASURER'S CERTIFICATE

THIS IS TO CERTIFY THAT I find no regular or special taxes due or delinquent against the property described in the Surveyor's Certificate and embraced in this plat, as shown by the records of this office, this 31st day of March, 1988.

3/31/88
Date

Douglas County Treasurer

COUNTY TREASURER OFFICIAL SEAL DOUGLAS COUNTY NEBRASKA

APPROVAL OF CITY ENGINEER OF OMAHA

I HEREBY APPROVE this plat of NELSON'S CREEK (Lots 190 through 330, inclusive and Outlot 4) as to the design standards this 6th day of April, 1988.

Larry L. Herrmann
City Engineer

I HEREBY CETIFY that adequate provisions have been made for compliance with Chapter 53 of the Omaha Municipal Code.

August 12, 1988
Date

Larry L. Herrmann
City Engineer

APPROVAL OF CITY PLANNING BOARD

This plat of NELSON'S CREEK was approved by the City Planning Board of the City of Omaha this 13th day of April, 1988.

Michael D. Fahey
Chairman, City Planning Board

APPROVAL OF OMAHA CITY COUNCIL

This plat of NELSON'S CREEK was approved and accepted by the City Council of Omaha on this 14th day of June, 1988.

Fred Conley
President

Mary Galligan Cornett
City Clerk

Walter M. Calinger
Mayor

9132 Aud Plat

RECEIVED
1988 AUG 12 AM 11:37
GEORGE J. BUGLEWICZ
REGISTER OF DEEDS
DOUGLAS COUNTY, NEBR.

BK 1832 N ____ C/O ____ FEE 76.50
PG 238 N ____ DEL ____ MC ____
OF Ded COMP ____ F/B ____

DEDICATION

KNOW ALL MEN BY THESE PRESENTS: That We, JACOBS LIMITED PARTNERSHIP, a Nebraska Limited Partnership, and the SCHOOL DISTRICT OF OMAHA, IN THE COUNTY OF DOUGLAS, IN THE STATE OF NEBRASKA being the sole Owners of the land described within the Surveyor's Certificate and embraced within this plat, have caused said land to be subdivided into lots and streets to be numbered and named as shown, said subdivision to be hereafter known as NELSON'S CREEK; and we do hereby ratify and approve of the disposition of our property as shown on this plat; and we do hereby dedicate to the public the streets as shown on the plat. We do further grant a perpetual easement to the Omaha Public Power District and to the Northwestern Bell Telephone Company and to any company which has been granted a franchise to provide a Cable Television System in the area to be subdivided, their successors and assigns, to erect, operate, maintain, repair and renew poles, wires, crossarms, downguys and anchors, cables, conduits and other related facilities; and to extend thereon wires or cables for the carrying and transmission of electric current for light, heat, and power and for the transmission of signals and sounds of all kinds including signals provided by a cable television system, and the reception thereon, over, through, under, and across a five (5') foot wide strip of land abutting all front and side boundary lot lines; an eight (8') foot wide strip of land adjoining the rear boundary lines of all interior lots and all exterior lots that are adjacent to presently platted and recorded lots; and a sixteen (16') foot wide strip of land adjoining the rear boundary lines of all exterior lots that are not adjacent to presently platted and recorded lots. The term "exterior lots" is herein defined as those lots forming the outer perimeter of the above-described subdivision. Said sixteen (16') foot wide easement will be reduced to an eight (8') foot wide strip when the adjacent land is surveyed, platted and recorded. We do further grant a perpetual easement to the Metropolitan Utilities District of Omaha, their successors and assigns, to erect, install, operate, maintain, repair and renew, pipelines, hydrants, and other related facilities, and to extend thereon pipes for the transmission of gas and water on, through, under and across a five (5) foot wide strip of land abutting all cul-de-sacs streets. No permanent buildings, trees, retaining walls, or loose rock walls shall be placed in the above-described easement ways, but the same may be used for gardens, shrubs, landscaping, and other purposes that do not then or later interfere with the aforesaid uses or rights herein granted.

JACOBS LIMITED PARTNERSHIP,
A Nebraska Limited Partnership, OWNER

By: Warren L. Jacobs
Warren L. Jacobs, General Partner

SCHOOL DISTRICT OF OMAHA, IN THE COUNTY OF DOUGLAS, IN THE STATE OF NEBRASKA, OWNER

By: F. E. "Fritz" Stavel

attest: Ned Krause
Assistant Secretary of Board

ACKNOWLEDGEMENTS OF NOTARIES

State of Nebraska)
) SS
County of Douglas)

On this 29 day of March, 1988, A.D., before me, a Notary Public, duly commissioned and qualified for said County, appeared WARREN L. JACOBS, who is personally known to me to be General Partner in JACOBS LIMITED PARTNERSHIP, a Nebraska Limited Partnership, and he did acknowledge his execution of the foregoing Dedication to be his voluntary act and deed.

Witness my hand and official seal the date last aforesaid.

GENERAL NOTARY - State of Nebraska DONALD M. PETERS My Commission Expires August 22, 1988

Donald M. Peters
Notary Public

State of Nebraska)
) SS
County of Douglas)

On this 30 day of March, 1988, A.D., before me, a Notary Public, duly commissioned and qualified for said County, appeared F.E. "Fritz" Stavel, who is personally known to me to be an authorized agent of the SCHOOL DISTRICT OF OMAHA, IN THE COUNTY OF DOUGLAS, IN THE STATE OF NEBRASKA, and he did acknowledge his execution of the foregoing Dedication to be his voluntary act and deed.

Witness my hand and official seal the date last aforesaid.

GENERAL NOTARY - State of Nebraska DOLORES J. TURNQUIST My Comm. Exp. Sept. 26, 1991

Dolores J. Turnquist
Notary Public

FINAL PLAT

lamp, rynearson & associates, inc.
architects engineers surveyors planners
14747 california street omaha, nebraska 68154 402·496·2498

NELSON'S CREEK (Lots 190-330 & Outlot 4)
DOUGLAS COUNTY, NEBRASKA

designer	LMS
draftsman	JJK
revisions	
job number	850015-2211
date	MARCH 16, 1988
sheet	1 of 1