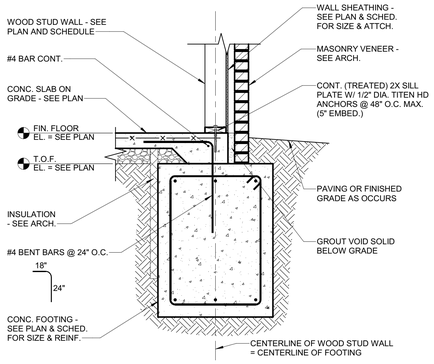

1 EXTERIOR WOOD STUD WALL AT CONCRETE GRADE BEAM
SCALE: 3/4" = 1'-0"

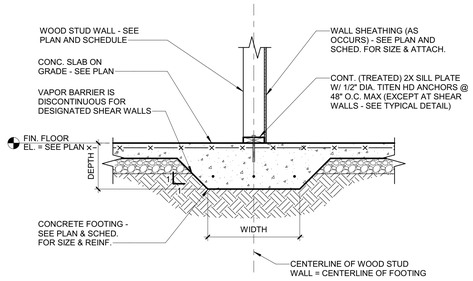

2 INTERIOR WOOD STUD WALL AT THICKENED SLAB FOOTING
SCALE: 3/4" = 1'-0"

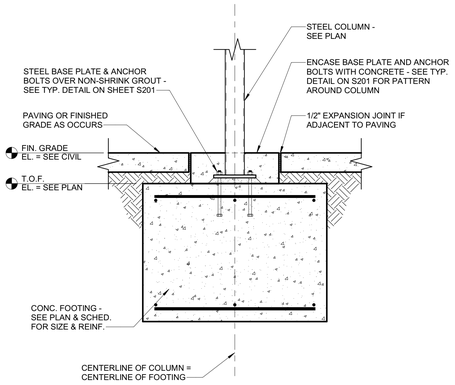

3 EXTERIOR STEEL COLUMN AT CONCRETE PAD FOOTING
SCALE: 3/4" = 1'-0"

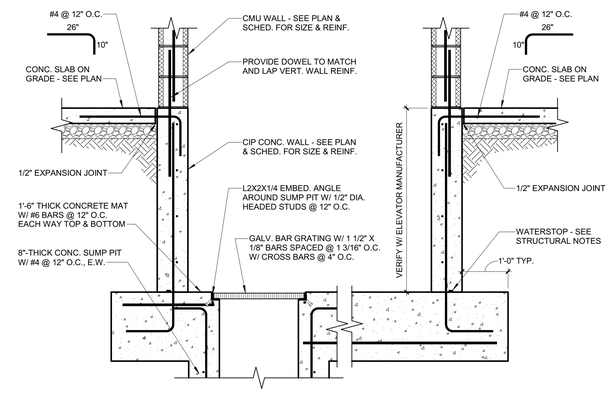

4 SECTION AT ELEVATOR PIT
SCALE: 3/4" = 1'-0"

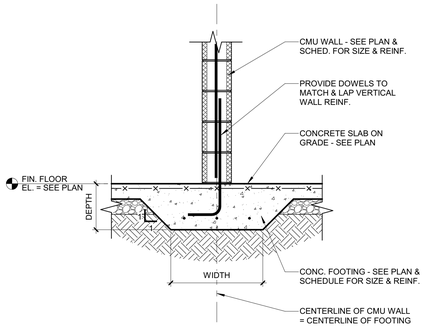

5 INTERIOR MASONRY WALL AT THICKENED SLAB FOOTING
SCALE: 3/4" = 1'-0"

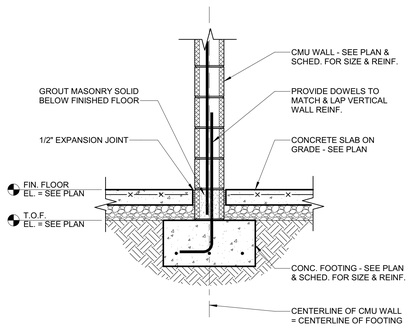

6 INTERIOR MASONRY WALL AT CONTINUOUS FOOTING
SCALE: 3/4" = 1'-0"

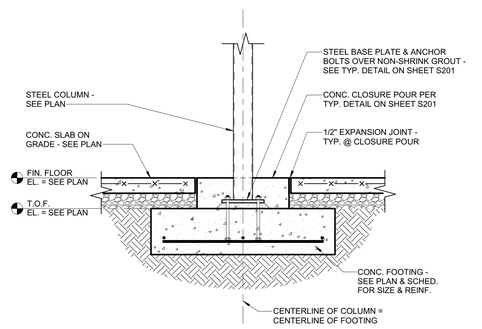

7 STEEL COLUMN AT CONCRETE PAD FOOTING
SCALE: 3/4" = 1'-0"

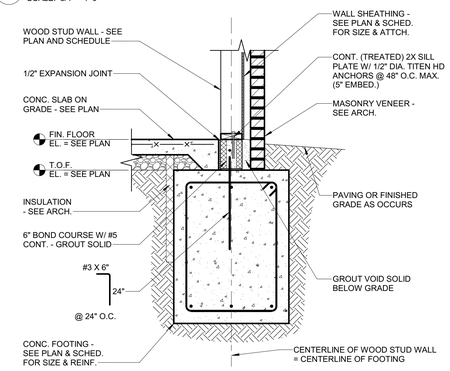

8 EXTERIOR WOOD STUD WALL AT CONCRETE GRADE BEAM
SCALE: 3/4" = 1'-0"

DESIGNED:	MJN	ISS/UE DATE:	11/5/2019
DRAWN:	MJN	REVISIONS:	
CHECKED:	KMW	No.: DATE: BY: DESCRIPTION:	

THIS DRAWING IS BEING MADE AVAILABLE BY SCHEMMER FOR USE BY CLIENT IN ACCORDANCE WITH AGREEMENT BETWEEN SCHEMMER AND CLIENT. SCHEMMER IS NOT RESPONSIBLE OR LIABLE FOR ANY USE OF THIS DRAWING OUTSIDE OF THE PROJECT IN ACCORDANCE WITH THE AGREEMENT.

DD - NOT FOR CONSTRUCTION

SCHEMMER
Design with Purpose. Build with Confidence.

TETRAD PROPERTY GROUP
GOLDENROD KEARNEY SENIOR LIVING
ADDRESS (OPEN PROJECT INFO TO ENTER)
ADDRESS

FOUNDATION DETAILS

PROJECT NO.: 07435.002

S202

C:\Users\nschmidt\Documents\Revit_temp\07435\02-STRUCT_R19_nschmidt.rvt
11/22/2019 11:42:25 AM

Project Number w/out "." for PDF numbering- 3-FOUNDATION DETAILS