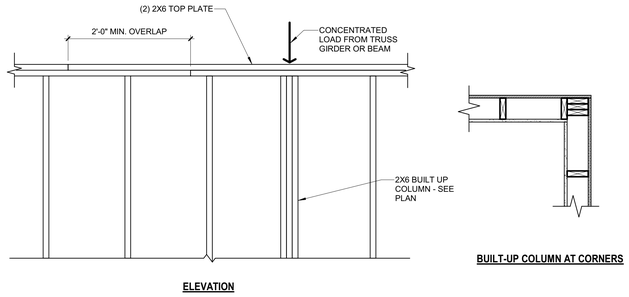

1 TYPICAL BUILT UP WOOD STUD COLUMN DETAIL
SCALE: 3/4" = 1'-0"

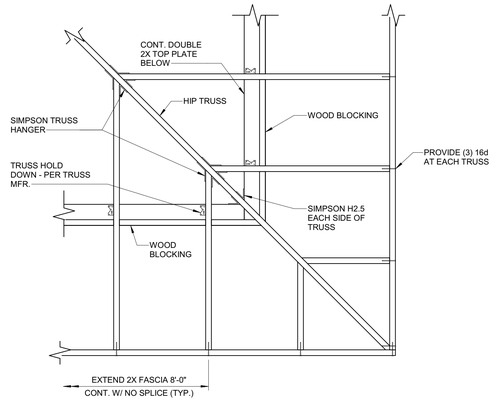

2 TYPICAL HIP ROOF CORNER FRAMING DETAIL
SCALE: 3/4" = 1'-0"

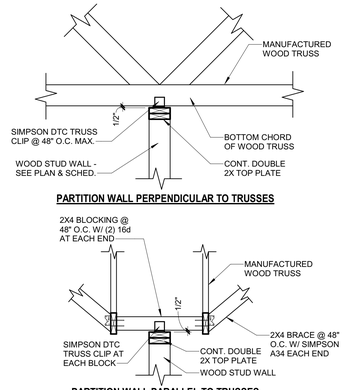

3 TYPICAL WOOD STUD WALL BRACE TO TRUSS
SCALE: 3/4" = 1'-0"

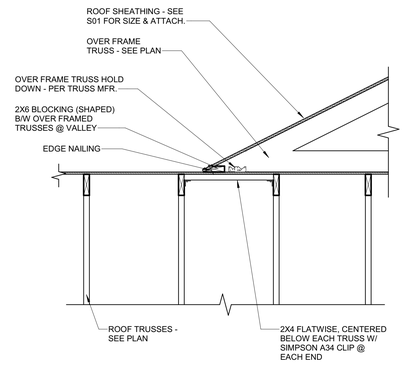

4 TYPICAL WOOD ROOF TRUSS OVER FRAMING DETAIL
SCALE: 3/4" = 1'-0"

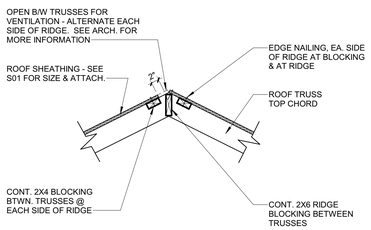

5 TYPICAL RIDGE FRAMING AT WOOD ROOF TRUSSES
SCALE: 3/4" = 1'-0"

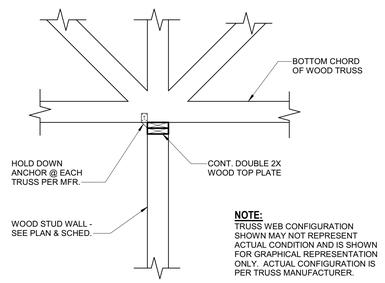

NOTE:
TRUSS WEB CONFIGURATION SHOWN MAY NOT REPRESENT ACTUAL CONDITION AND IS SHOWN FOR GRAPHICAL REPRESENTATION ONLY. ACTUAL CONFIGURATION IS PER TRUSS MANUFACTURER.

6 TYPICAL WOOD TRUSS BEARING AT INTERIOR WOOD STUD WALL
SCALE: 3/4" = 1'-0"

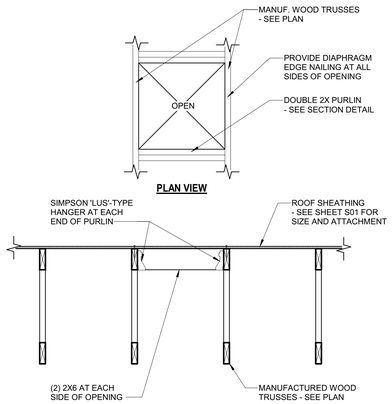

9 TYPICAL ROOF OPENING BETWEEN WOOD TRUSSES
SCALE: 3/4" = 1'-0"

DESIGNED:	MJN
DRAWN:	MJN
CHECKED:	KMW

ISSUE DATE: 11/5/2019
REVISIONS:

No.:	DATE:	BY:	DESCRIPTION:

THIS DRAWING IS BEING MADE AVAILABLE BY SCHEMMER FOR USE ON THIS PROJECT IN ACCORDANCE WITH AGREEMENT BETWEEN SCHEMMER AND NO SUBSTITUTE OR ALTERNATE USE FOR ANY USE OF THIS DRAWING SHALL BE AUTHORIZED BY THE IN ACCORDANCE WITH THE AGREEMENT.

DD - NOT FOR CONSTRUCTION

SCHEMMER
Design with Purpose. Build with Confidence.

TETRAD PROPERTY GROUP
GOLDENROD KEARNEY SENIOR LIVING
ADDRESS (OPEN PROJECT INFO TO ENTER)
ADDRESS

TYPICAL FRAMING DETAILS

PROJECT NO.: 07435.002

S302