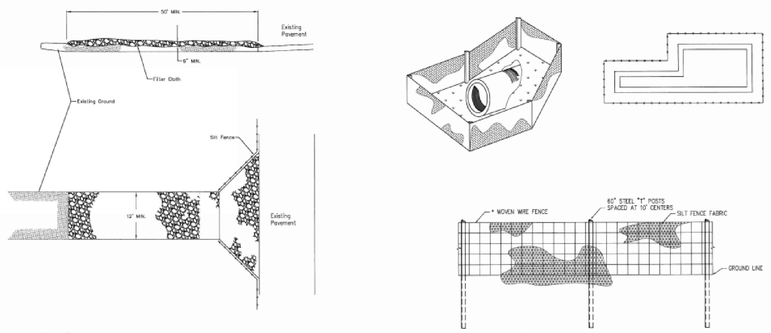

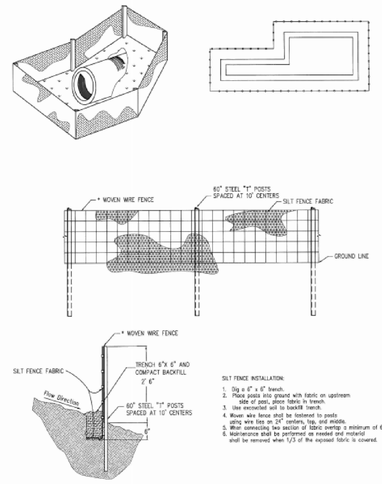

Construction Entrance/Exit Installation:

1. Stone Size –Use 2" stone, or reclaimed or recycled concrete equivalent.
2. Length – As required, but not less than 50 feet (except on a single residence lot where a 30 foot minimum length would apply).
3. Thickness – Not less than six (6) inches.
4. Width – Twelve (12) feet minimum, but not less than the full width at points where ingress or egress occurs.
5. Filter Cloth – Will be placed over the entire area prior to placing of stone. Filter will not be required on a single family residence lot.
6. Surface Water – All surface water flowing or diverted toward construction entrance shall be piped across the entrance.
7. Maintenance – The entrance shall be maintained in a condition which will prevent tracking or flowing of sediment onto public right-of-way. This may require periodic top dressing with additional stone as conditions demand and repair and/or clean out of any measures used to trap sediment. All sediment spilled, dropped, washed or tracked onto public rights-of-way must be removed immediately.
8. Washing – Wheels shall be cleaned to remove sediment prior to entrance onto public rights-of-way. When washing is required, it shall be done on an area stabilized with stone and which drains to an approved sediment trapping device.
9. Periodic inspection and needed maintenance shall be provided after each rain.

SILT FENCE INSTALLATION:

1. Dig a 6" x 6" trench.
2. Place posts into ground with fabric on upstream side of post, place fabric in trench.
3. Use excavated soil to backfill trench.
4. Woven wire fence shall be fastened to posts using wire ties on 24" centers, top, and middle.
5. When connecting two section of fabric overlap a minimum of 6".
6. Maintenance shall be performed as needed and material shall be removed when 1/3 of the exposed fabric is covered.

Revisions | By

KEARNEY

Engineering Department
1915 10th Avenue
P.O. Box 1168
Kearney, NE 68848-1168
Phone: 308.865.5600
Fax: 308.865.5608
www.cityofkearney.org

Sediment Control Details - Sheet 1 of 1

Kearney Standard Drawings

Date: 10/8/2019
Drawn By: ALF
Approved by: BAD
Drawing Location:
H:\Kearney Space and Plans - SHC\1-AutoCad Files\Civil Details\Sediment Control.dwg

Sheet 01 of 01

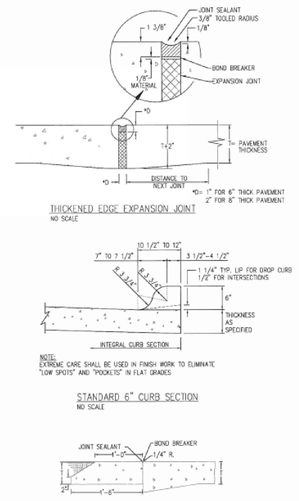

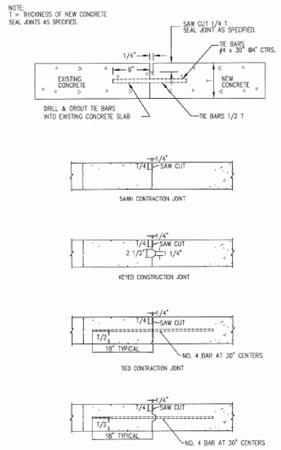

Revisions | By

KEARNEY

Engineering Department
1915 10th Avenue
P.O. Box 1168
Kearney, NE 68848-1168
Phone: 308.865.5600
Fax: 308.865.5608
www.cityofkearney.org

Pavement Details - Sheet 1 of 3

Kearney Standard Drawings

Date: 10/8/2019
Drawn By: AAA
Approved by: BAD
Drawing Location:
H:\Kearney Space and Plans - SHC\1-AutoCad Files\Civil Details\Pavement Details.dwg

Sheet 01 of 03

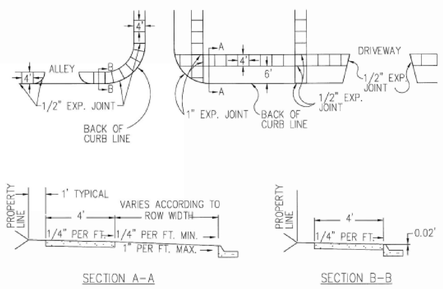

TYPICAL SIDEWALK DETAIL
NO SCALE

NOTES

1. ONE HALF INCH EXPANSION JOINTS SHALL BE PLACED IN ALL SIDEWALKS AT INTERVALS OF NOT MORE THAN 100' AND AS SHOWN WHERE SIDEWALKS BUTT AGAINST CURB, BUILDINGS, OR OTHER FIXED OBJECTS. NOT LESS THAN 50' IN LENGTH ONE SUCH EXPANSION JOINT SHALL BE PLACED AS DIRECTED BY THE ENGINEER.
2. SIDEWALK SLOPE MAY BE VARIED TO SUIT EXISTING CONDITIONS. RECOMMENDED SLOPE TO BE 1/4"/FT. VARIATIONS TO SUIT EXTREME CONDITIONS TO BE AS DIRECTED BY THE ENGINEER. MAX. ALLOWABLE CROSS SLOPE = 1/4" PER FT. MAX. ALLOWABLE LONGITUDINAL SLOPE = 1" PER FOOT.
3. ALL SIDEWALKS 4 FEET OR MORE IN WIDTH SHALL BE SCORED IN PANELS NO GREATER THAN 4' SQUARE.
4. NO SIDEWALK REPAIR SHALL BE LESS THAN ONE COMPLETE PANEL.
5. SIDEWALK INSTALLED ADJACENT TO CURB SHALL BE INSTALLED 0.02' HIGHER THAN TOP OF CURB.
6. ALL NEW SIDEWALK SHALL HAVE THE PROPER HANDICAP ACCESS.
7. ALL HANDICAP RAMPS WILL BE STAMPED WITH DETECTION DOMES.

Revisions | By

KEARNEY

Engineering Department
1915 10th Avenue
P.O. Box 1168
Kearney, NE 68848-1168
Phone: 308.865.5600
Fax: 308.865.5608
www.cityofkearney.org

Sidewalk Details - Sheet 1 of 1

Kearney Standard Drawings

Date: 10/8/2019
Drawn By: AAA
Approved by: BAD
Drawing Location:
H:\Kearney Space and Plans - SHC\1-AutoCad Files\Civil Details\Sidewalk Details.dwg

Sheet 01 of 01

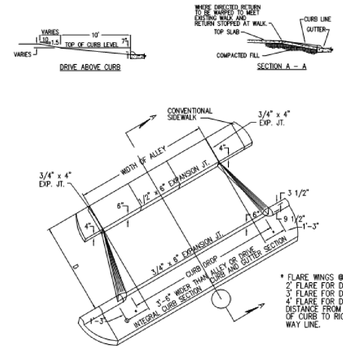

CONTACT CITY PUBLIC WORKS DEPARTMENT FOR DRIVEWAY DROP CURB LOCATIONS

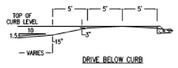

DRIVEWAY OR ALLEY RETURN DETAIL
NO SCALE

	DIMENSION (SEE FIGURE)	RESIDENTIAL	COMMERCIAL	INDUSTRIAL
WIDTH				
MINIMUM	W	10	25	25
MAXIMUM	W	35	35	35
RIGHT-TURN RADIUS				
MINIMUM	R	5	15	15
MAXIMUM	R	15	20	20
SPACING				
FROM PROPERTY LINE (MIN.)	P	0	0	0
FROM STREET CORNER (MIN.)	C	40	60	60
BETWEEN DRIVEWAYS (MIN.)	S	4	30	30
FROM PROPERTY CORNER (MIN.)	PC	25	50	50
DRIVEWAY TAPER				
WIDTH (MIN.)	T	2		
WIDTH (MAX.)	T	6		
LENGTH (MIN.)	L	6		
LENGTH (MAX.)	L	12		

NOTES:

All driveways on Arterial roadways or within 200 feet of Arterial roadways must be approved by the Public Works Dept prior to beginning construction.

A minimum 15' Radius is required if the curb line is a driving lane.

The width of a driveway at any sidewalk shall not be greater than 35'.

Place a minimum of 1" expansion joint at the property line.

Shared driveways are allowed for Single Family and Multi-Family Residential property without providing the 4' Foot space between the two driveways as long as the maximum combined width does not exceed 50' feet.

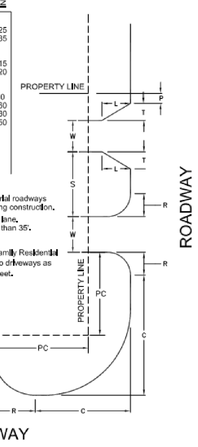

NOTES:
PROPERTY CORNERS MUST BE PROTECTED.
ALL EXPANSION JOINTS SHALL BE INCIDENTAL TO PAVING.

Revisions | By

KEARNEY

Engineering Department
1915 10th Avenue
P.O. Box 1168
Kearney, NE 68848-1168
Phone: 308.865.5600
Fax: 308.865.5608
www.cityofkearney.org

Driveway Details - Sheet 1 of 1

Kearney Standard Drawings

Date: 10/8/2019
Drawn By: AAA
Approved by: BAD
Drawing Location:
H:\Kearney Space and Plans - SHC\1-AutoCad Files\Civil Details\Driveway Details.dwg

Sheet 01 of 01

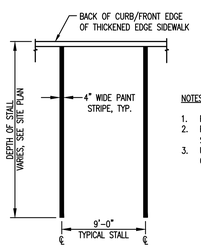

NOTES:

1. PAINT COLOR SHALL BE WHITE.
2. PAINT SHALL CONFORM TO FEDERAL SPECIFICATION TT-P-115 (2 COATS).
3. UNDER NO CIRCUMSTANCES SHALL FACE OF CURB BE PAINTED.

1 PARKING STALL STRIPING
NO SCALE

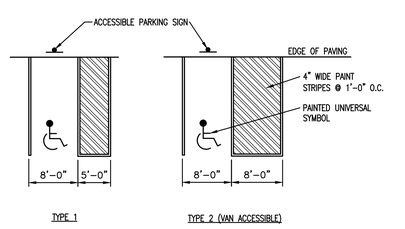

2 ACCESSIBLE PARKING STALLS
NO SCALE

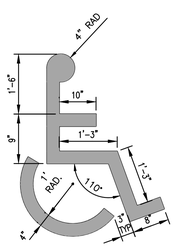

3 PAINTED ACCESSIBLE SYMBOL
NO SCALE

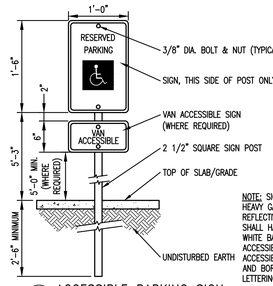

NOTE: SIGNS SHALL BE CONSTRUCTED OF 0.080" HEAVY GAUGE ALUMINUM WITH ENGINEER GRADE REFLECTIVE SURFACE. THE RESERVED PARKING SIGN SHALL HAVE GREEN LETTERING AND BORDER ON A WHITE BACKGROUND WITH A WHITE SYMBOL OF ACCESSIBILITY ON A BLUE BACKGROUND. THE VAN ACCESSIBLE SIGN SHALL HAVE GREEN LETTERING AND BORDER ON A WHITE BACKGROUND OR WHITE LETTERING AND BORDER ON A BLUE BACKGROUND.

4 ACCESSIBLE PARKING SIGN
NO SCALE

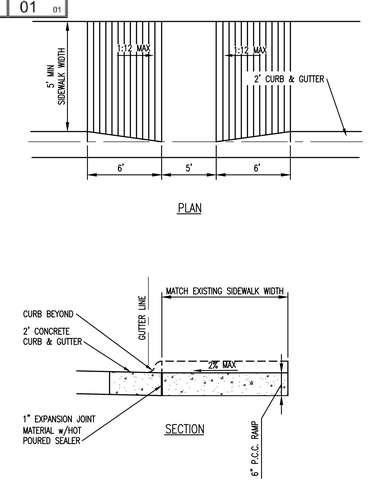

5 HANDICAP RAMP
NO SCALE

DESIGNED:	XXX	ISSUE DATE: 10/7/2019
DRAWN:	XXX	REVISIONS:
CHECKED:	XXX	No.: DATE: BY: DESCRIPTION:

THIS DRAWING IS BEING MADE AVAILABLE BY SCHEMMER FOR REVIEW AND COMMENT. NO AGREEMENT OR PROFESSIONAL RESPONSIBILITY IS ESTABLISHED OR RESPONSIBILITY OR LIABILITY ASSUMED BY SCHEMMER UNLESS A WRITTEN AGREEMENT HAS BEEN ENTERED INTO. ANY USE OR REUSE OF THIS DRAWING WITHOUT WRITTEN VERIFICATION OR ADAPTATION BY SCHEMMER FOR THE SPECIFIC PURPOSE INTENDED WILL BE AT THE USER'S SOLE RISK AND WITHOUT LIABILITY OR LEGAL EXPOSURE TO SCHEMMER.

DD SUBMITTAL - NOT FOR CONSTRUCTION

SCHEMMER
Design with Purpose. Build with Confidence.

TETRAD PROPERTY GROUP
GOLDENROD KEARNEY SENIOR LIVING

SITE DETAILS

PROJECT NO.: 07435.002

C201

P:\07435\002_CIVIL\01-SHEETS\C201.dwg
11/15/2019 10:08:40 AM Nebraska, Area