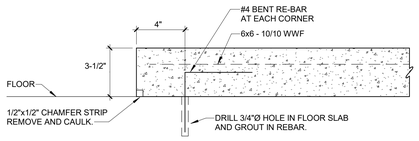

NOTES:

1. INSTALL NEW HOUSEKEEPING PADS AS INDICATED ON PLANS. VERIFY DIMENSIONS WITH EQUIPMENT SIZES.
2. VERIFY SIZE AND LOCATION OF EQUIPMENT ANCHOR BOLTS.
3. PROVIDE DOWEL RODS 18" ON CENTER AROUND FULL PERIMETER OF PAD IF LONG DIMENSION IS GREATER THAN 72".

1 HOUSEKEEPING PAD DETAIL
SCALE: NOT TO SCALE

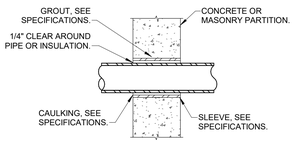

NOTE:
1. CAULK FULL PERIMETER OF PIPE AT BOTH INSIDE & OUTSIDE OF WALL.

DETAIL OF SLEEVE FOR PIPING PENETRATION OF VERTICAL PARTITIONS

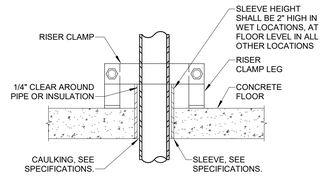

NOTE:
1. CAULK FULL PERIMETER OF PIPE AT BOTH TOP AND BOTTOM OF FLOOR.

DETAIL OF SLEEVE FOR PIPING PENETRATION OF FLOOR

2 INTERIOR PIPE SLEEVE DETAILS
SCALE: NOT TO SCALE

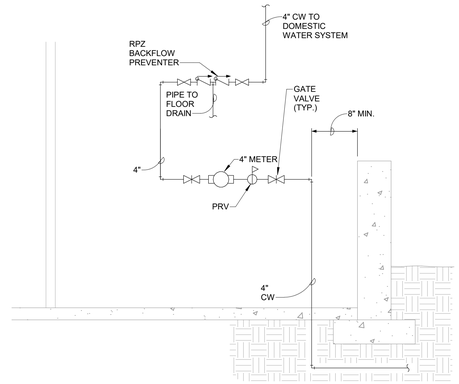

4 DOMESTIC WATER SERVICE PIPING SCHEMATIC
SCALE: NOT TO SCALE

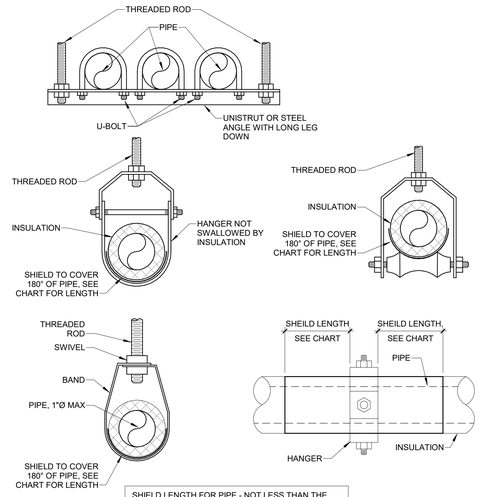

SHIELD LENGTH FOR PIPE - NOT LESS THAN THE FOLLOWING:	
a. NPS 1/4" TO 3-1/2"	12" LONG AND .048" THICK
b. NPS 4"	12" LONG AND .06" THICK
c. NPS 5" TO 6"	18" LONG AND .06" THICK
d. NPS 8" TO 14"	24" LONG AND .075" THICK
e. NPS 16" TO 24"	24" LONG AND .105" THICK

NOTE:
1. PIPES NPS 8" AND LARGER: INCLUDE WOOD OR REINFORCED CALCIUM-SILICATE-INSULATION INSERTS OF LENGTH AT LEAST AS LONG AS PROTECTIVE SHIELD.
2. THERMAL-HANGER SHIELDS: INSTALL WITH INSULATION SAME THICKNESS AS PIPING INSULATION.

3 PIPE HANGER DETAIL
SCALE: NOT TO SCALE

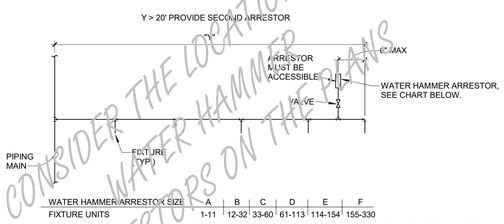

WATER HAMMER ARRESTOR SIZE	A	B	C	D	E	F
FIXTURE UNITS	1-11	12-32	33-60	61-113	114-154	155-330

NOTE: IF INCOMING PRESSURE IS GREATER THAN 65 PSI, ARRESTOR SIZE SHALL BE INCREASED BY 1 SIZE.

CONSIDER THE LOCATION OF WATER HAMMER ARRESTORS ON THE PLANS

5 FLUSH VALVE WATER HAMMER ARRESTOR DETAIL
SCALE: NOT TO SCALE

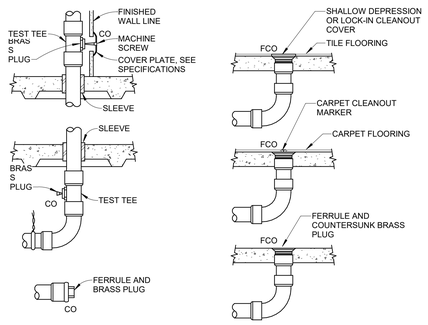

6 TYPICAL CLEANOUT DETAIL
SCALE: NOT TO SCALE

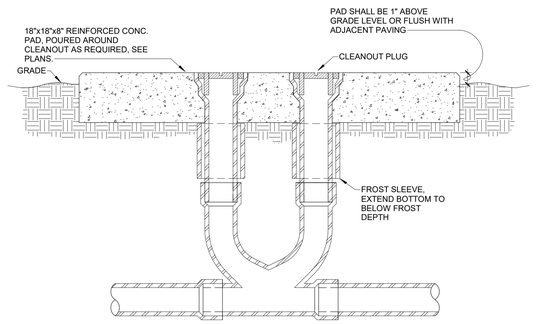

7 DOUBLE GRADE CLEANOUT DETAIL
SCALE: NOT TO SCALE

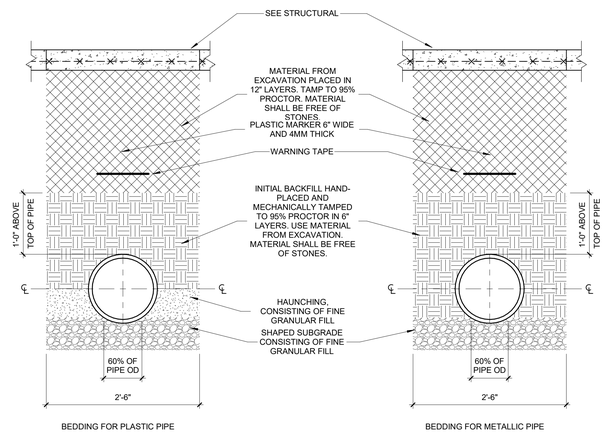

9 BEDDING FOR SANITARY PIPING
NOT TO SCALE

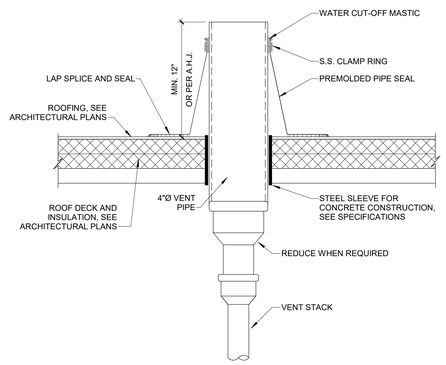

8 VENT THRU ROOF DETAIL
SCALE: NOT TO SCALE

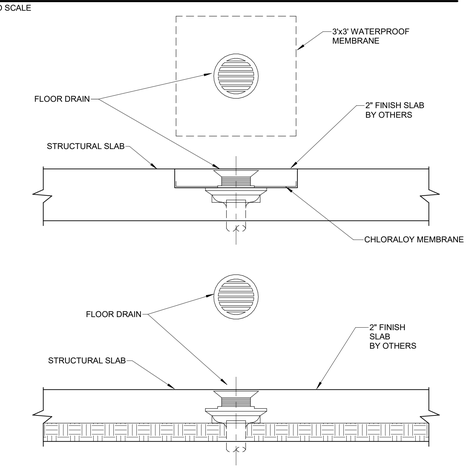

11 FLOOR DRAIN DETAIL
SCALE: NOT TO SCALE

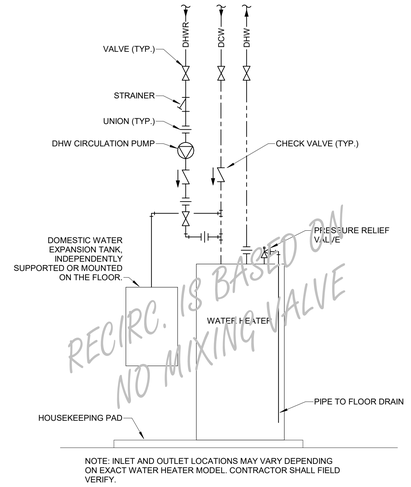

RECIRC. IS BASED ON NO MIXING VALVE

10 DOMESTIC WATER HEATER PIPING DETAIL
SCALE: NOT TO SCALE

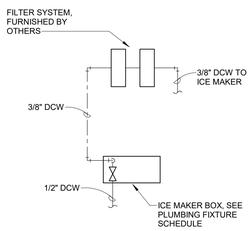

12 ICE MACHINE CONNECTION DETAIL
SCALE: NOT TO SCALE

DESIGNED: AJP | ISS/IE DATE: 11/26/2019
DRAWN: AJP/MLB | REVISIONS: No.: DATE: BY: DESCRIPTION:
CHECKED: Checker

THIS DRAWING IS BEING MADE AVAILABLE BY SCHEMMER FOR USE BY THE OWNER IN ACCORDANCE WITH AGREEMENT BETWEEN SCHEMMER AND THE OWNER. SCHEMMER MAKES NO REPRESENTATIONS AS TO ITS SUITABILITY FOR ANY USE OF THIS DRAWING OTHER THAN THE PROJECT IN ACCORDANCE WITH THE AGREEMENT.

SCHEMMER
Design with Purpose. Build with Confidence.

TETRAD PROPERTY GROUP
GOLDENROD KEARNEY SENIOR LIVING
22ND AVENUE,
KEARNEY, NE 68845
DETAILS - PLUMBING

PROJECT NO.: 07435.002

P401

C:\Users\ajoppisli\Documents\Revit_temp\07435002_MECH_R19_ajoppisli@schemmer.com.rvt
11/22/2019 11:33:28 AM