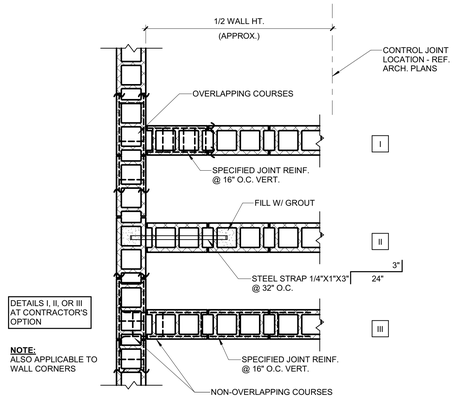


1 TYPICAL CMU WALL INTERSECTION DETAILS
SCALE: 3/4" = 1'-0"

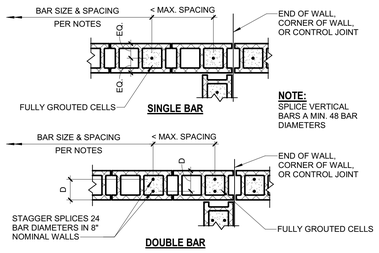


| NOMINAL WALL THICKNESS | D (INCHES) | ALLOWABLE TOLERANCE |
|---|---|---|
| 8" | 5.25 | +/- 1/2" |
| 10" | 7.25 | +/- 1/2" |
| 12" | 9.00 | +/- 3/4" |

2 TYPICAL CMU WALL END REINFORCING
SCALE: 3/4" = 1'-0"

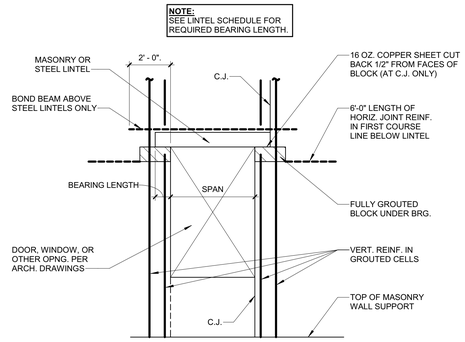


3 TYPICAL CMU LINTEL ELEVATION
SCALE: 3/4" = 1'-0"

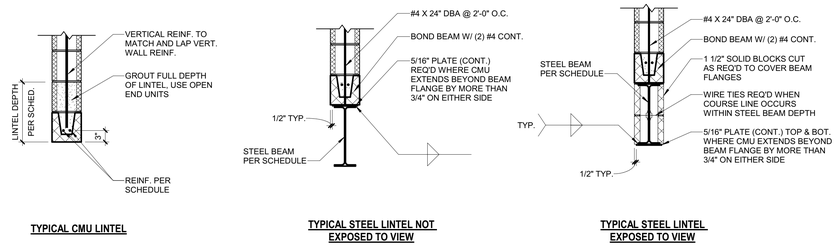


4 TYPICAL CMU LINTEL DETAILS
SCALE: 3/4" = 1'-0"

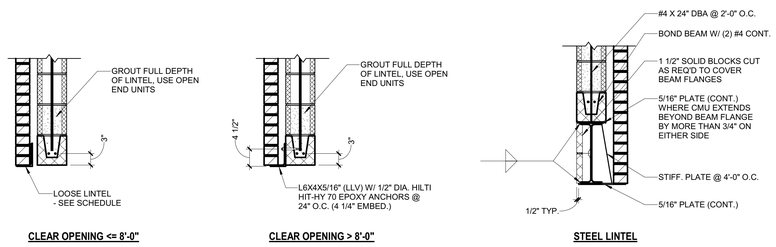


NOTE:
SEE LINTEL SCHEDULE AND DETAILS FOR LINTEL TYPE, SIZE, PLATES AND ALL OTHER INFORMATION NOT COVERED BY BRICK LEDGE DETAILS.

5 TYPICAL VENEER SUPPORT AT CMU LINTELS
SCALE: 3/4" = 1'-0"

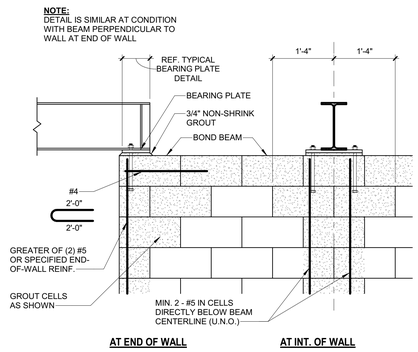


6 TYPICAL CMU WALL REINFORCING AT STEEL BEAM BEARING
SCALE: 3/4" = 1'-0"

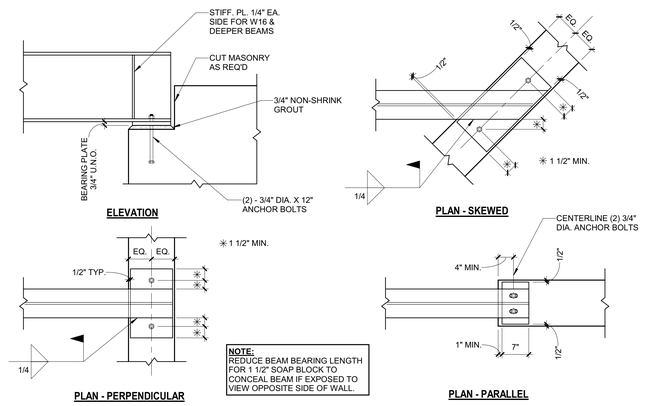


7 TYPICAL BASE PLATE AT STEEL BEAM BEARING ON CMU
SCALE: 3/4" = 1'-0"

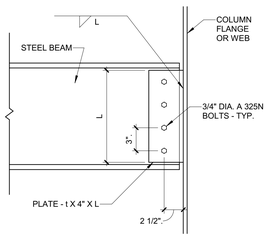


| BEAM TO COLUMN CONNECTION SCHEDULE | | | | |
|---|---|---|---|---|
| BEAM SIZE | # BOLTS, N | WELD LENGTH, L (IN.) | PL. THICKNESS, t (IN.) | WELD SIZE (IN.) |
| W8 | 2 | 6 | 1/4 | 1/4 |
| W10 | 2 | 6 | 1/4 | 1/4 |
| W12 | 3 | 9 | 3/8 | 1/4 |
| W14 | 3 | 9 | 3/8 | 1/4 |
| W16 | 4 | 12 | 3/8 | 1/4 |
| W18 | 4 | 12 | 3/8 | 1/4 |
| W21 | 5 | 15 | 3/8 | 1/4 |
| W24 | 7 | 21 | 3/8 | 1/4 |
| W27 | 8 | 23 1/2 | 3/8 | 1/4 |

8 TYPICAL STEEL BEAM TO COLUMN CONNECTION
SCALE: 3/4" = 1'-0"

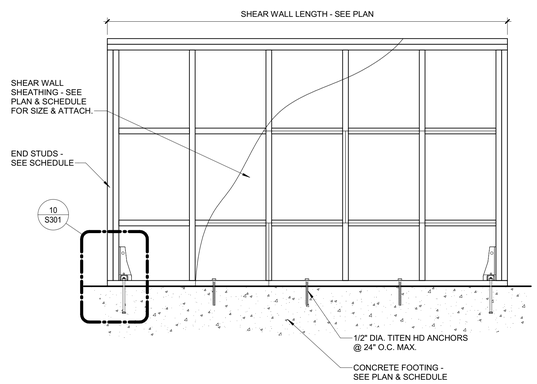


9 TYPICAL WOOD STUD SHEAR WALL ELEVATION
SCALE: 3/4" = 1'-0"

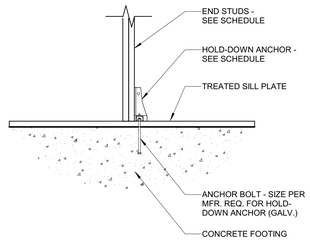


10 TYPICAL SHEAR WALL HOLD DOWN
SCALE: 3/4" = 1'-0"

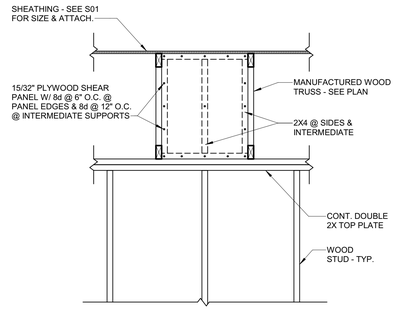


11 TYPICAL PLYWOOD SHEAR PANEL
SCALE: 3/4" = 1'-0"

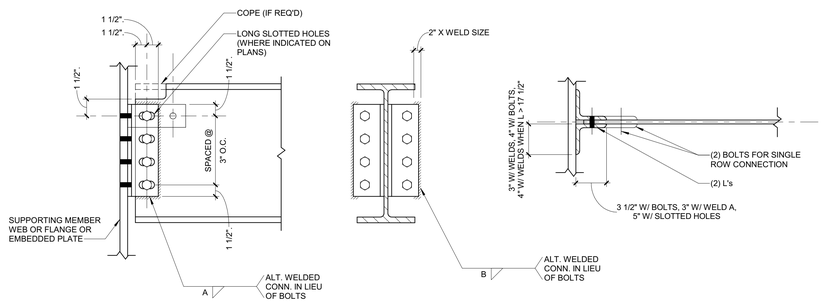


12 TYPICAL STEEL BEAM TO BEAM CONNECTION
SCALE: 3/4" = 1'-0"

**DOUBLE ANGLE FRAMED BEAM CONNECTIONS**
(BEARING-TYPE OR ALTERNATE WELDED CONNECTIONS)

BOLT MATERIAL: ASTM A325
BOLT DIA.: 0.75"
BOLT TYPE: N (X: THREADS EXCLUDED; N: THREADS INCLUDED)
MEMBER STEEL: A572, GR. 50
ANGLE STEEL: A36
HOLE TYPE: STANDARD OR SHORT SLOTTED / PERPENDICULAR TO FORCE

| MEMBER GROUP | CONNECTING ANGLES | | NO. OF BOLT ROWS | ALT. WELD - A | ALT. WELD - B |
|---|---|---|---|---|---|
| | THICKNESS | LENGTH | | | |
| | IN. | IN. | | IN. | IN. |
| W8 X 10-15 | 1/4 | 6 | 2 | 3/16 | 1/4 |
| W8 X 18-35 | 5/16 | 6 | 2 | 1/4 | 1/4 |
| W10 X 12-26 | 5/16 | 6 | 2 | 1/4 | 1/4 |
| W12 X 14-30 | 5/16 | 6 | 2 | 1/4 | 1/4 |
| W14 X 22-30 | 5/16 | 9 | 3 | 1/4 | 1/4 |
| W16 X 26-36 | 5/16 | 12 | 4 | 1/4 | 1/4 |
| W18 X 35-40 | 5/16 | 12 | 4 | 1/4 | 1/4 |
| W21 X 44-62 | 5/16 | 12 | 4 | 1/4 | 1/4 |
| W24 X 55-62 | 5/16 | 15 | 5 | 1/4 | 1/4 |
| W27 X 84-161 | 5/16 | 21 | 7 | 1/4 | 1/4 |

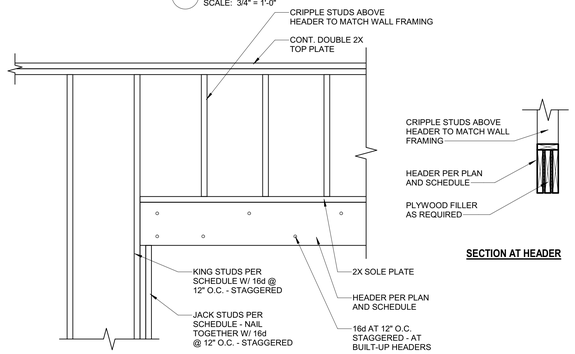


13 TYPICAL WOOD HEADER DETAIL
SCALE: 3/4" = 1'-0"

| | | | |
|---|---|---|---|
| DESIGNED: | MJN | ISSUE DATE: | 11/5/2019 |
| DRAWN: | MJN | REVISIONS: | |
| CHECKED: | KMW | No.: DATE: BY: DESCRIPTION: | |

THIS DRAWING IS BEING MADE AVAILABLE BY SCHEMMER FOR USE ON THIS PROJECT IN ACCORDANCE WITH SCHEMMER'S AGREEMENT WITH THE OWNER. SCHEMMER ASSUMES NO RESPONSIBILITY OR LIABILITY FOR ANY USE OF THIS DRAWING ON ANY OTHER PROJECT NOT IN ACCORDANCE WITH THE ORIGINAL SCHEMMER AGREEMENT.

**DD - NOT FOR CONSTRUCTION**

SCHEMMER
*Design with Purpose. Build with Confidence.*

**TETRAD PROPERTY GROUP**
GOLDENROD KEARNEY SENIOR LIVING
ADDRESS (OPEN PROJECT INFO TO ENTER)
ADDRESS
**TYPICAL FRAMING DETAILS**

PROJECT NO.: 07435.002

S301

C:\Users\nschmidt\Documents\Revit_temp\07435002-STRUCT_R19_nschmidt.rvt
11/22/2019 11:42:27 AM

Project Number w/out "." for PDF numbering- 3-TYPICAL FRAMING DETAILS