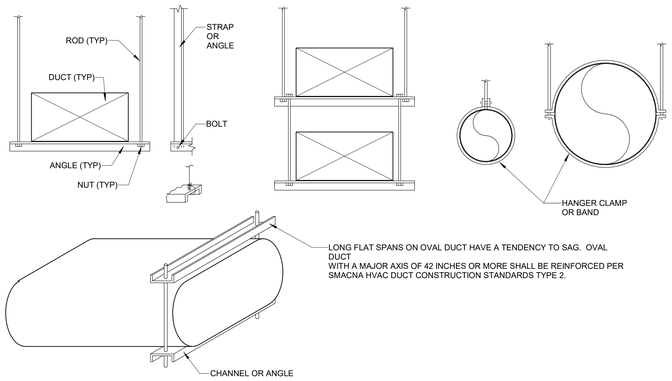

NOTES:
1. DO NOT EXCEED ALLOWABLE LOAD LIMITS OF ANY OR ALL OF THE INDIVIDUAL TRAPEZE PARTS.
2. DO NOT PENETRATE DUCT OR DUCT INSULATION VAPOR BARRIER WHEN SECURING HANGERS TO DUCTWORK.
3. USE HANGER CLAMPS OR BANDS FOR ROUND DUCT AS ROUND DUCT TENDS TO DEFORM ON TRAPEZE HANGERS.
4. TEARS, PUNCTURES, ETC. SHALL BE REPAIRED WITH TAPE OR MASTIC TO MAINTAIN THE INTEGRITY OF THE VAPOR BARRIER.
5. DO NOT USE ANY STRAP HANGERS WITH SCREWS ON ANY DUCTWORK THAT IS EXTERNALLY WRAPPED.

4 DUCT HANGER DETAIL
SCALE: NOT TO SCALE

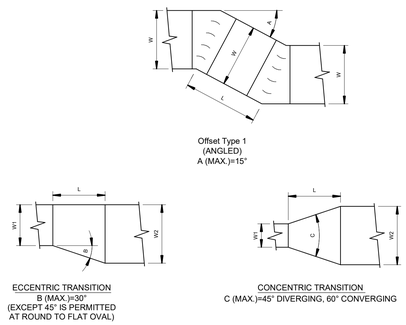

8 OFFSETS AND TRANSITIONS DETAIL
SCALE: NOT TO SCALE

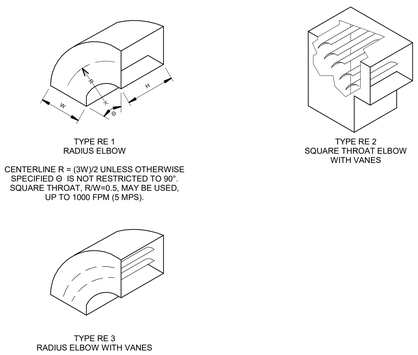

12 DUCT ELBOW DETAIL
SCALE: NOT TO SCALE

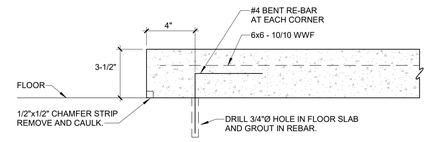

NOTES:
1. INSTALL NEW HOUSEKEEPING PADS AS INDICATED ON PLANS. VERIFY DIMENSIONS WITH EQUIPMENT SIZES.
2. VERIFY SIZE AND LOCATION OF EQUIPMENT ANCHOR BOLTS.
3. PROVIDE DOWEL RODS 18" ON CENTER AROUND FULL PERIMETER OF PAD IF LONG DIMENSION IS GREATER THAN 72".

1 HOUSEKEEPING PAD DETAIL
SCALE: NOT TO SCALE

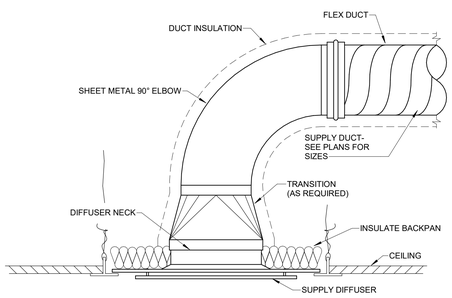

9 SUPPLY DIFFUSER/ DUCT CONNECTION DETAIL
SCALE: NOT TO SCALE

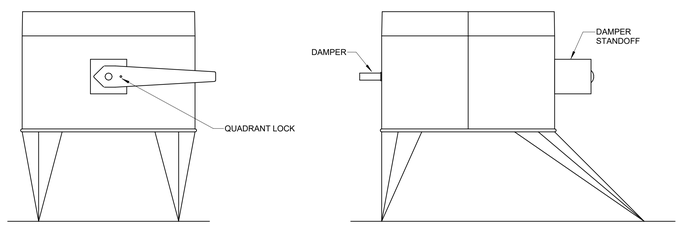

NOTE:
ALL TAPS TO AIR TERMINALS REQUIRING BALANCING AT DUCT SHALL BE MADE USING A HIGH EFFICIENCY TAKEOFF.

11 HIGH EFFICIENCY TAKEOFF DETAIL
SCALE: NOT TO SCALE

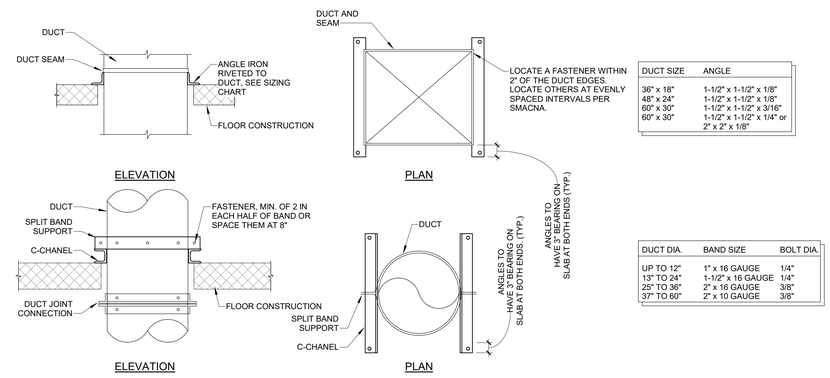

DUCT SIZE	ANGLE
36" x 18"	1-1/2" x 1-1/2" x 1/8"
48" x 24"	1-1/2" x 1-1/2" x 1/8"
60" x 30"	1-1/2" x 1-1/2" x 3/16"
60" x 30"	1-1/2" x 1-1/2" x 1/4" or 2" x 2" x 1/8"

DUCT DIA.	BAND SIZE	BOLT DIA.
UP TO 12"	1" x 16 GAUGE	1/4"
13" TO 24"	1-1/2" x 16 GAUGE	1/4"
25" TO 36"	2" x 16 GAUGE	3/8"
37" TO 60"	2" x 10 GAUGE	3/8"

NOTE: FIRE CAULK AS REQUIRED.

10 VERTICAL DUCT SUPPORT DETAILS
SCALE: NOT TO SCALE

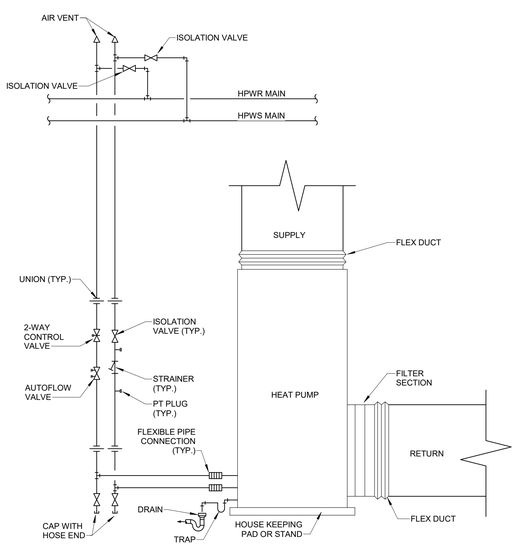

2 VERTICAL HEAT PUMP DETAIL
SCALE: NOT TO SCALE

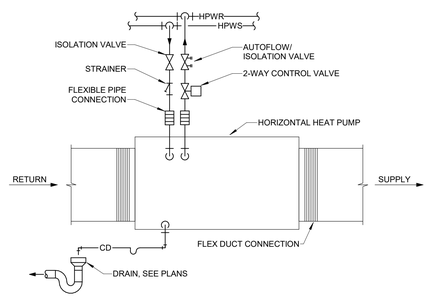

3 HORIZONTAL HEAT PUMP DETAIL
SCALE: NOT TO SCALE

NOTES:
1. VALVES AND HOSE KITS SHALL BE LINE SIZE SHOWN ON PIPING PLANS WITH REDUCER FOR CONNECTION AT HEAT PUMP AS REQUIRED.
2. LOCATE PLUG ON SUPPLY AND RETURN LINE IMMEDIATELY AT HEAT PUMP AND PROVIDE PLUG AT INLET AND OUTLET OF THE STRAINER.

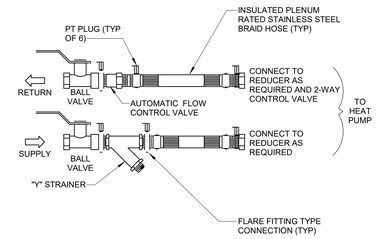

5 HEAT PUMP HOSE CONNECTION WITH AUTOFLOW VALVE DETAIL
SCALE: NOT TO SCALE

DESIGNED:	AJP	ISS/UE DATE:	11/26/2019
DRAWN:	AJP/MLB	REVISIONS:	
CHECKED:	Checker	No.: DATE: BY: DESCRIPTION:	

THIS DRAWING IS BEING MADE AVAILABLE BY SCHEMMER FOR USE ON THIS PROJECT IN ACCORDANCE WITH SCHEMMER'S STANDARD AGREEMENT FOR PROFESSIONAL SERVICES. SCHEMMER ASSUMES NO RESPONSIBILITY OR LIABILITY FOR ANY USE OF THIS DRAWING OTHER THAN THAT STATED IN ACCORDANCE WITH THE SCHEMMER STANDARD AGREEMENT.

SCHEMMER
Design with Purpose. Build with Confidence.

TETRAD PROPERTY GROUP
GOLDENROD KEARNEY SENIOR LIVING
22ND AVENUE,
KEARNEY, NE 68845

DETAILS - MECHANICAL

PROJECT NO.: **07435.002**

M401

C:\Users\apospisil\Documents\Revit_temp\07435002_MECH_R19_apospisil@schemmer.com.rvt
11/22/2019 11:31:27 AM