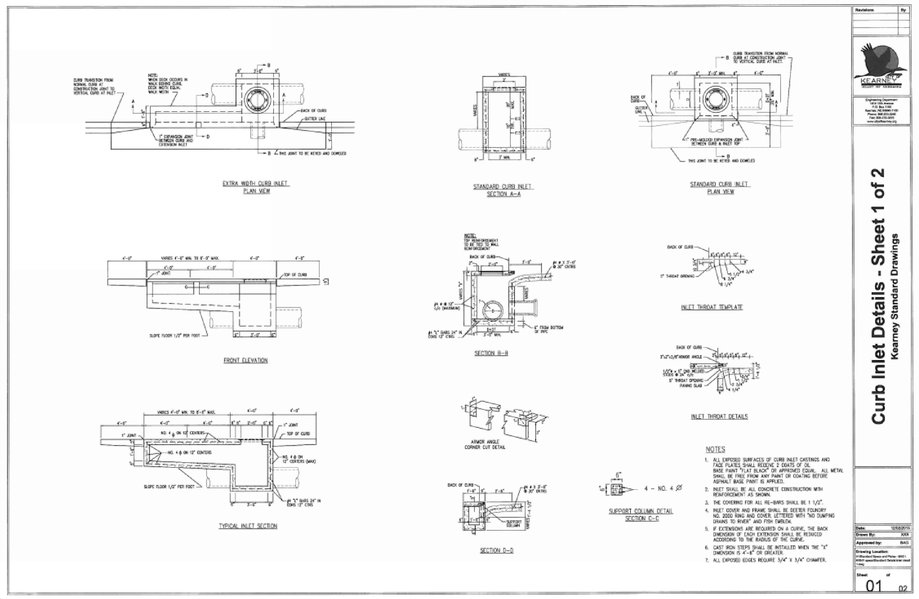

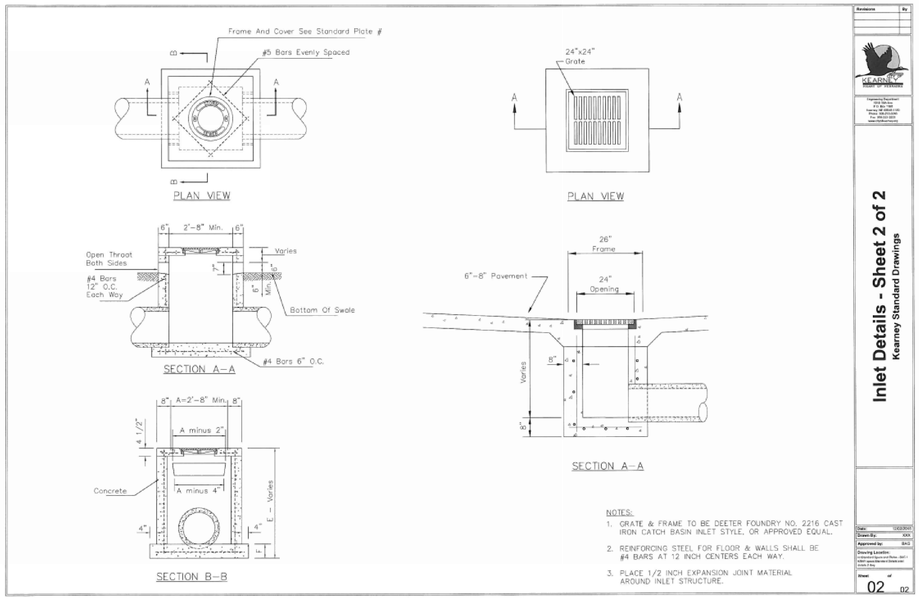

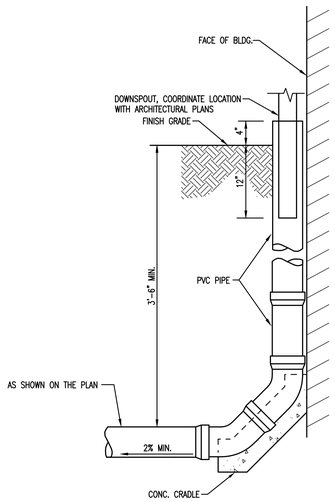

5 DOWNSPOUT CONNECTION
NO SCALE

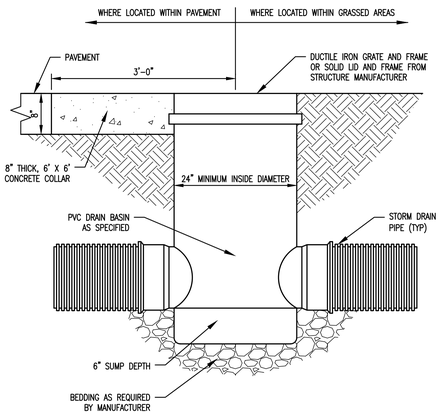

FOR DRAIN BASINS:
GRATE SHALL BE H-20 RATED STANDARD GRATE TO MATCH STRUCTURE DIAMETER BY STRUCTURE MANUFACTURER.

FOR OVERFLOW STRUCTURE IN BIORETENTION AREA:
GRATE SHALL BE DOMED GRATE TO MATCH STRUCTURE DIAMETER BY STRUCTURE MANUFACTURER.

FOR MANHOLES:
LID SHALL BE STANDARD H-20 RATED SOLID LID TO MATCH STRUCTURE DIAMETER BY STRUCTURE MANUFACTURER.

6 PVC MANHOLE/DRAIN BASIN
NO SCALE

DESIGNED: XXX
DRAWN: XXX
CHECKED: XXX
ISSUE DATE: 10/7/2019
REVISIONS:
No.: DATE: BY: DESCRIPTION:

THIS DRAWING IS BEING MADE AVAILABLE AS AN AID FOR THE PURPOSE OF OBTAINING PERMITS AND AGREEMENT ON PROFESSIONAL RESPONSIBILITY. SCHEMMER DOES NOT RESPONSIBILITY OR LIABILITY FOR ANY USE OF THIS DRAWING FOR ANY PURPOSE OTHER THAN THE ABOVE, OR ANY USE WITHOUT EXPERT IN THE ABOVE AGREEMENT.

DD SUBMITTAL - NOT FOR CONSTRUCTION

SCHEMMER
Design with Purpose. Build with Confidence.

TETRAD PROPERTY GROUP
GOLDENROD KEARNEY SENIOR LIVING

SITE DETAILS

PROJECT NO.: 07435.002

C202

P:\07435\000_CAD\Civil\07435002-1.dwg
11/11/2019 10:04:44 AM Hinds, Ale